EDCS Circular diffusers with single adjustable cones

Description

Circular diffusers with micrometric adjustment with single cone.

Diffuser characteristics

Material: aluminium.
Finish: painted white RAL 9010.
Installation: secured with screws to the diffuser neck.

Use

Ducted air conditioning and treatment systems with installation height between 2.7 and 6 m.

Models

- EDCS circular diffusers with single adjustable cone
- EDCS-PQ circular diffusers with single adjustable cone on square panel 595x595 mm.

Accessories

- EPZ-DC galvanised plenum;
- EPI-DC insulated plenum;
- SD damper;
- EQUA equaliser;
- Fixing clips kit.

Dimensions

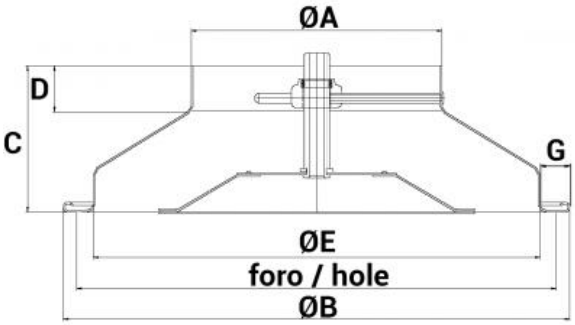

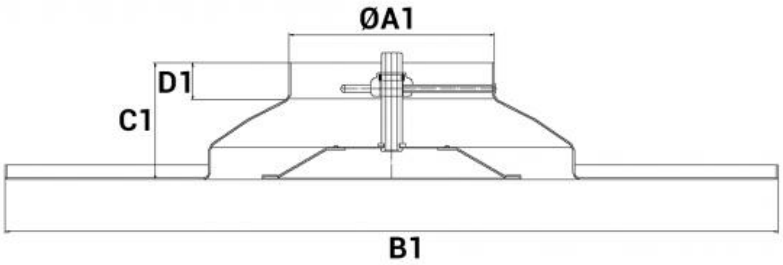

all dimensions are expressed in mm

model	EDCS							EDCS-PQ			
	Ø A	Ø B	Ø E	Ø hole	C	D	G	Ø A1	B1 x B1	C1	D1
100	96	250	195	225	85	33	25	96	595 x 595	85	33
150	145	330	280	308	90	25	23	146	595 x 595	90	23
160	156	330	280	308	90	27	23	156	595 x 595	90	28
200	196	445	370	410	115	37	35	196	595 x 595	115	37
250	246	535	460	500	135	37	35	246	595 x 595	135	37

Operating data

Vk: effective speed (m/s)
m^3/h: flow rate
Pa: pressure drops in Pascal
L(m): air throw in metres calculated on ceiling installation, terminal velocity 0.25 m/s
dB(A): noise leve

Model	effective cross-section m^2	Vk	2	3	4	5	6
100	0,0059	m^3/h	38	57	75	95	115
		Pa	7,6	17,2	30,6	47,7	68,7
		L(m)	0,4	0,6	0,8	1,0	1,2
150	0,0149	m^3/h	96	145	195	242	290
		Pa	6,3	14,2	25,2	39,4	56,8
		L(m)	0,7	1,1	1,5	1,9	2,2
160	0,0167	m^3/h	108	163	217	271	325
		Pa	6,1	13,8	24,5	38,3	55,1
		L(m)	0,8	1,2	1,7	2,1	2,5
200	0,0279	m^3/h	181	271	361	452	542
		Pa	5,5	12,5	22,2	34,7	49,9
		L(m)	1,2	1,7	2,3	2,9	3,5
250	0,0448	m^3/h	291	435	580	725	870
		Pa	5,0	11,3	20,1	31,5	45,3
		L(m)	1,5	2,4	3,2	4,1	4,9
noise level		dB(A)	20	25	30	35	40

SD regulation damper

The SD butterfly regulation damper is suitable for installation on circular diffusers, it is made of galvanised steel and it comes with a sturdy adjustable opening/closing mechanism, which prevents vibrations and noise.
The damper is adjusted by turning the adjustment screw using a screwdriver, by inserting it into the hole on the threaded bar of the diffuser.

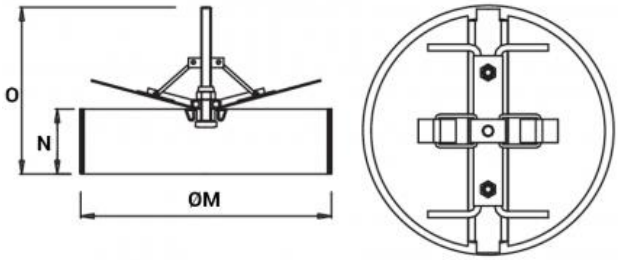

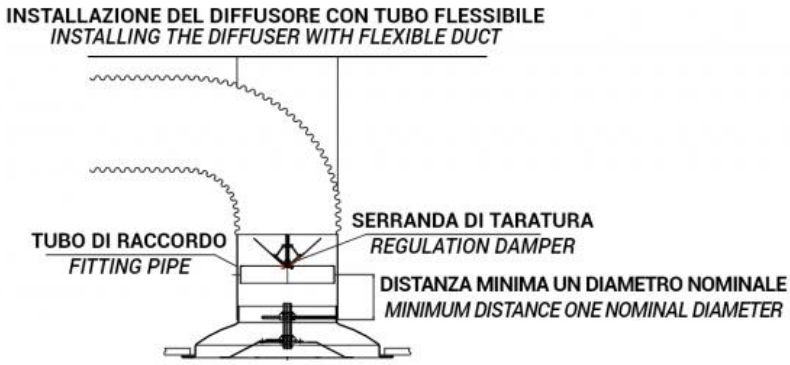

All dimensions are expressed in mm

Model	ØM	N	O
100	95	39	100
150	145	39	100
160	155	39	100
200	195	39	100
250	245	39	100

EQUA equaliser

The equaliser is an accessory used to split the air and distribute it evenly at the diffuser outlet.

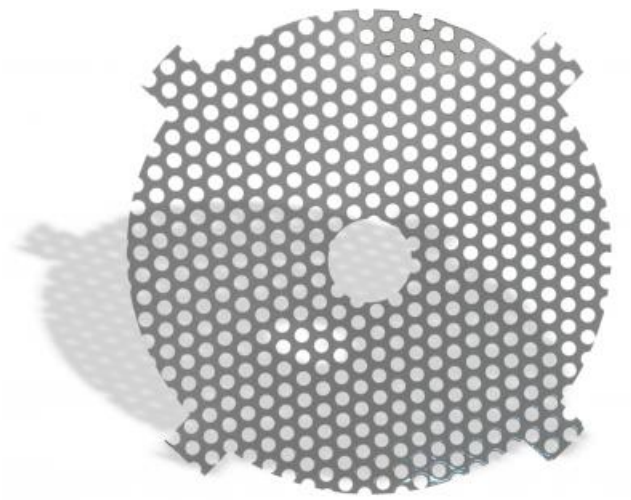

Fixing clips

Fixing clips for installation on plasterboard false ceilings or rigid false ceilings (3 pieces per pack).

Plenum EPZ-DC EPI-DC

All measurements are expressed in mm.

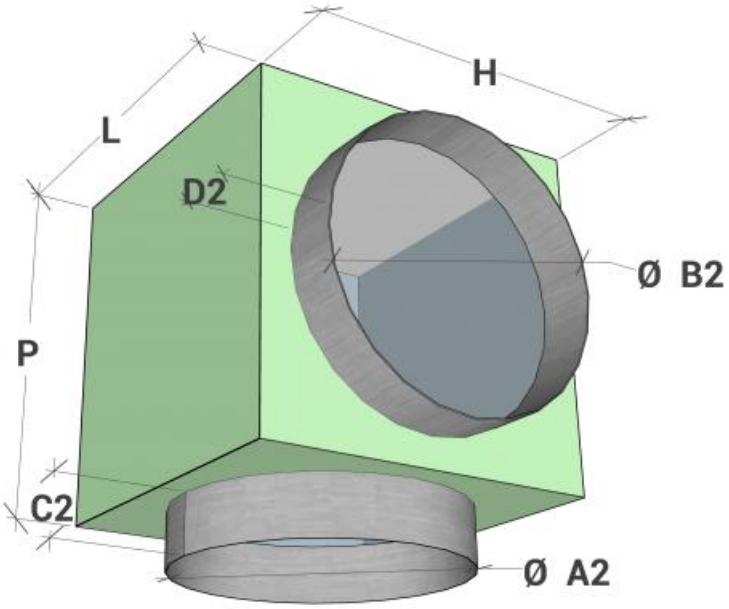

model	L	H	P	ØA2 Diffuser	ØB2 duct - flexible or rigid	C2	D2
100	200	200	200	102	95	70	100
150	250	250	250	152	145	70	100
160	250	250	250	162	155	70	100
200	300	300	300	202	195	70	100
250	350	350	350	252	245	70	100

Price list

Item normally available from stock

Model	EDCS diffuser	diffuser on panel 595x595 EDCS-PQ	SD damper	EQUA equaliser	EPZ-DC galvanised plenum	i EPI-DC insulated plenum
	euro	**euro**	**euro**	**euro**	**euro**	**euro**
100	106,48	133,25	28,04	17,82	55,30	75,13
150	108,46	135,26	27,84	17,82	62,91	85,00
160	114,82	138,08	27,84	17,82	63,14	85,27
200	131,31	152,96	29,44	17,82	71,86	96,61
250	159,34	184,05	34,16	18,66	95,57	123,97

Item normally available from stock

Fixing clips kit for EDCS (3 pcs)	euro
EDCS 100-160	9,99
EDCS 200-250	10,55