EVVKP In line fans for rectangular duct

Description:

Centrifugal fans for rectangular duct with external rotor motor phase .

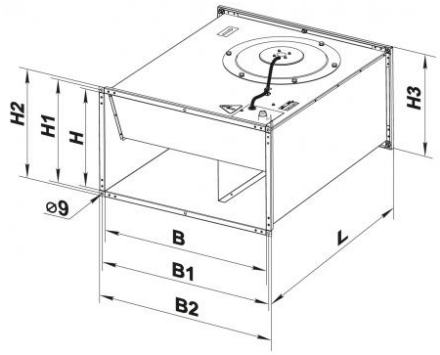

Characteristics:

Material : galvanized steel
Colour: galvanized
Installation: on a rectangular duct

Use:

- Flow rates from 100 to 2470 m³/h
- Static pressure up to 500 Pa

Accessories :

Electronic speed regulator RCS 300 .

Dimensions

All dimensions are in millimeters

model	B	B1	B2	H	H1	H2	H3	L	Weight Kg
EVVKP 2E 400x200	400	420	440	200	220	240	240	500	11,25
EVVKP 2E 500x250	500	520	540	250	270	290	290	640	17,88
EVVKP 4E 500x300	500	520	540	300	320	340	340	680	19,8
EVVKP 4E 600x300	600	620	640	300	320	340	342	680	27,77

Operating data and price list

dB(A): noise index

modello	giri r.p.m.	alimentazione	potenza assorbita		dB(A) a 3 m	Grado di protezione	temperatura flusso aria °C	
			W	A			minima	massima
EVVKP 2E 400x200	2600	230V-1F-50Hz	138	0,6	59	IP X4	-25	+45
EVVKP 2E 500x250	2550	230V-1F-50Hz	305	1,32	61	IP X4	-25	+45
EVVKP 4E 500x300	1390	230V-1F-50Hz	140	0,57	53	IP X4	-25	+45
EVVKP 4E 600x300	1400	230V-1F-50Hz	220	0,90	55	IP X4	-25	+45

Item normally available from stock

modello	pressione statica Pa						euro
	10	100	200	300	400	500	
EVVKP 2E 400x200	930	850	750	630	480	140	⌄
EVVKP 2E 500x250	1720	1550	1380	1200	1000	700	⌄
EVVKP 4E 500x300	1700	1250	920	200	-	-	⌄
EVVKP 4E 600x300	2470	1750	1480	1000	-	-	⌄

Speed control

Item normally available from stock

Modello	Euro
RCS 300	⌄