CR120 - 1S European circular fire dampers surface-mounted for small diameters

Description

Circular surface-mounted fire dampers with a fire resistance up to 120 minutes. They ensure minimal pressure drop thanks to the thin blade, the thermal fuse aligned with the blade and the drive located outside the casing. Available in the version for small diameters (from 100 mm). The galvanised steel casing contributes to the damper's light weight. The fire dampers are CE marked with performance declared according to EN 15650:2010 and with fire resistance determined according to EN 1366-2 up to EI 120 (ve i ↔ o)S - (500Pa) and EI 120 (ho i ↔ o)S - (500Pa) depending on the installation surface. The dampers can be equipped with different types of mechanisms, depending on the specific needs of the project.

Standard version

With thermo-mechanical manual drive: code CR120 1S + MFUS + FDCU

With ONE RFT electronic servomotor drive: code CR120 1S + ONE T - 24 / 230 V FDCU

With Belimo servomotor drive: code CR120 1S + BFLT 24 / 230 V

Use and classification with mechanical, magnetic or motorised control

Rigid wall: EI 120 (ve i ↔ o) S – (500 Pa)
Lightweight wall: EI 120 (ve i ↔ o) S – (300 Pa)
Slab: EI 120 (ho i ↔ o) S – (500 Pa)

Versions on request

With electromagnet drive normally energised or normally de-energised , code CR120 1S + UNIQ VD/VM FDCB

Characteristics

Galvanised steel structure.
20 mm thick refractory blade.
Dimensions: from Ø 100 to Ø 315
Heat-expanding perimeter seal.
2 microswitches (one start and one end switch) already installed.
Easy to install.
Optimised free surface and minimal pressure drop.
Total absence of levers.
Optimal acoustic performance.
Class C air tightness according to EN1751.
Suitable for recessed installation.
Suitable for rigid wall, rigid floor and lightweight wall (plasterboard).
Does not require maintenance.
For indoor use.
Operating temperature: max. 50°C

ONE RFT actuator characteristics

The microprocessor-controlled servomotor with spring return, ONE Rf-t, is designed to efficiently operate Rf-t fire dampers of any size.
The main characteristics of the ONE Rf-t actuator are the following:
• very low stand-by energy consumption (0.12 W) which allows for up to 5 times less energy consumption compared to conventional servomotors installed in fire dampers;
• the opening status of the fire damper is visible via an indicator located on the actuator; in addition to this, an LED indicates whether the device is powered;
• the main thermal activation device allows for operational tests to be performed even if there is no mains power supply;
• a further activation device is integrated in the actuator in order to detect a possible fire outside the duct;
• the fuse can be replaced quickly and easily. The fuse housing is located in the servomotor body and it can also be used as an inspection hole for an endoscopic camera;
• the damper can be reset manually using a common 9 Volt alkaline battery. Up to 50 reset cycles can be performed with a single battery;
• IP54 enclosure made of shock-resistant technical polymer.
• there is a pair of microswitches at the start and at the end. Both power and position cables are oversized and clearly identified.
• Power supply 24 VAC/VDC (-10/+20%) or 230 VAC (-15/+15%).

Minimum distance principle

This type of fire damper has been optimised to minimise the installation distance between two dampers and between the damper and the adjacent wall.
CR120 FIRE DAMPERS CAN BE INSTALLED COUPLED AND ADJACENT TO A WALL, CEILING OR FLOOR.

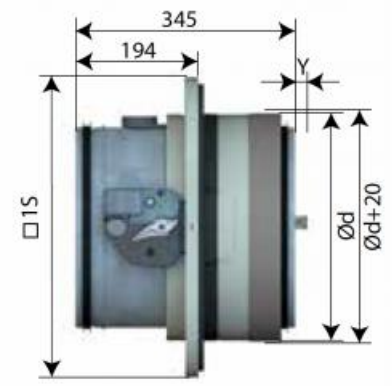

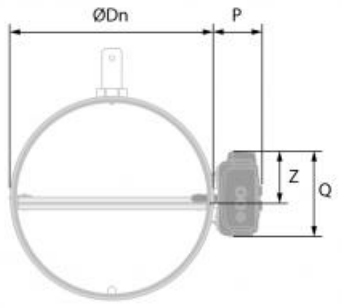

Dimensions:

y: blade coming out on wall side

All dimensions are expressed in mm

ØDn	1s x 1s	Ød	Ø foro	Y
100	279	160	180	-
125	299	180	200	-
160	339	220	240	-
200	374	255	275	-
250	419	300	320	-
315	474	355	375	20

	MFUS	ONE	BFLT
P (mm)	72	80	63
Q (mm)	123	136	100
Z (mm)	70	75	58

Price list:

diameter	manual	ONE T 24V	ONE T 230V	BFLT 24V	BFLT 230V	UNIQ VD/VM
mm	euro	euro	euro	euro	euro	euro
100	314,40	659,55	705,43	678,48	726,65	584,72
125	329,47	674,09	719,96	692,86	741,01	602,48
160	342,10	686,26	732,16	704,87	753,04	617,30
200	352,94	696,73	732,16	715,24	763,38	630,05
250	373,44	716,50	762,38	734,75	782,91	654,14
315	424,19	765,44	811,29	783,08	831,24	713,83

Spare fuses

Item normally available from stock

Description	Euro
MFUS thermo-mechanical manual fuse	16,13
ONE T fuse for RFT electronic servomotor	66,56
Z-BAT fuse for BELIMO electronic servomotor	66,56